Part A: Spread Spectrum Systems

Dr. *ir*. Muhammad Nasir KHAN

Department of Electrical Engineering
Swedish College of Engineering and Technology

February 27, 2014

Introduction

Spectrum is a general term used to encompass the spatial and temporal properties of any medium, including fiber optic cable, coaxial cable, and ambient air. From the view of a strict constructionist, spectrum is a type of division based on frequency or wavelength. Generally, we think of signals in the real-world setting as being functions of time.

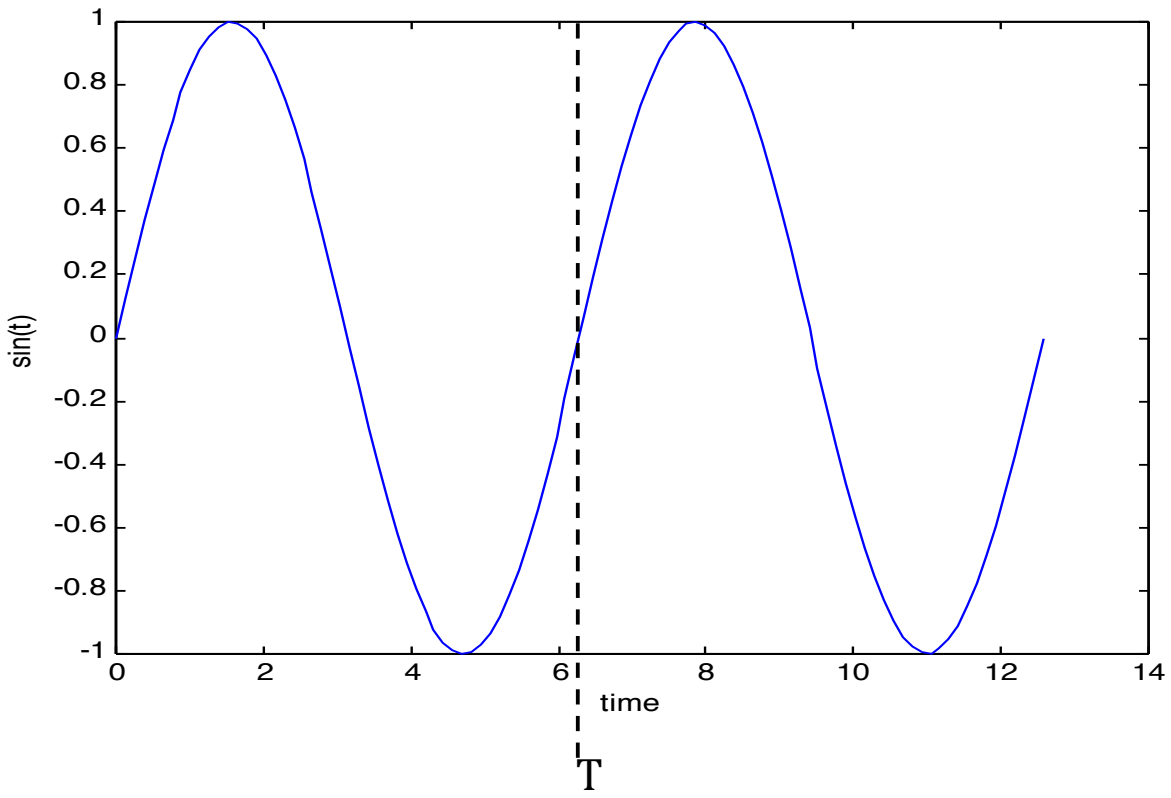

Introduction (Cont'd)

It is an interesting exercise to discover how frequency is related to the time domain.

In the time domain, it becomes evident that the sine wave in las slide has similar characteristics after the time T. In fact, the function repeats itself after this point.

The point labeled T is a special point in that it marks the periodicity of the function (i.e., the shortest length of time after which the function repeats itself). The frequency, f, of the function is defined as the reciprocal of the period T, i.e., $f = 1/T$.

From this expression, it is demonstrated that the frequency domain is the inverse of the time domain. This is seemingly at odds with the original explanation of spectrum.

Narrowband Systems

Traditionally spectrum efficiency (measured in bits per seconds per Hz) in digital communication system is obtained by transmitting as much information as possible using a narrow frequency bands.

Narrowband Systems: Bandwidth is close to the minimum necessary required to transmit the information.

In contrast to NB, wideband systems or spread spectrum (SS) systems use a bandwidth much wider than minimum necessary for the application

Motivation

Motivations for the SS initially from the military context

Narrowband Systems (Cont'd)

- In general, signal transmission is enabled through some means of modulation.
- In the past, systems have relied primarily on narrow-band modulation schemes. In these systems, all of the power in a transmitted signal is confined to a very narrow portion of the frequency bandwidth.
- As a result of these narrow frequencies, an interfering frequency at or near the transmitting frequency can cause interference,
  $\Rightarrow$ render the signal unrecoverable.

Narrowband Systems Examples

Amplitude Modulation is one example of a narrow-band modulation scheme in which the amplitude of the carrier signal is made stronger or weaker based on the information in the signal to be transmitted.

The large amounts of power that are associated with Amplitude Modulation allow the signal to travel large distances before it attenuates to an undetectable level.

A second popular form of modulation is Frequency Modulation, in which the phase of the carrier frequency is adjusted in accordance with the signal being transmitted.

Narrowband Systems (Cont'd)

Narrow-band modulation schemes are not the only implementations available to broadcasters.

Broadcasting entities may take advantage of the fact that a defined spectral power density may be achieved not only through high power over a very narrow frequency range, but also through lower powers spread over much larger frequency ranges.

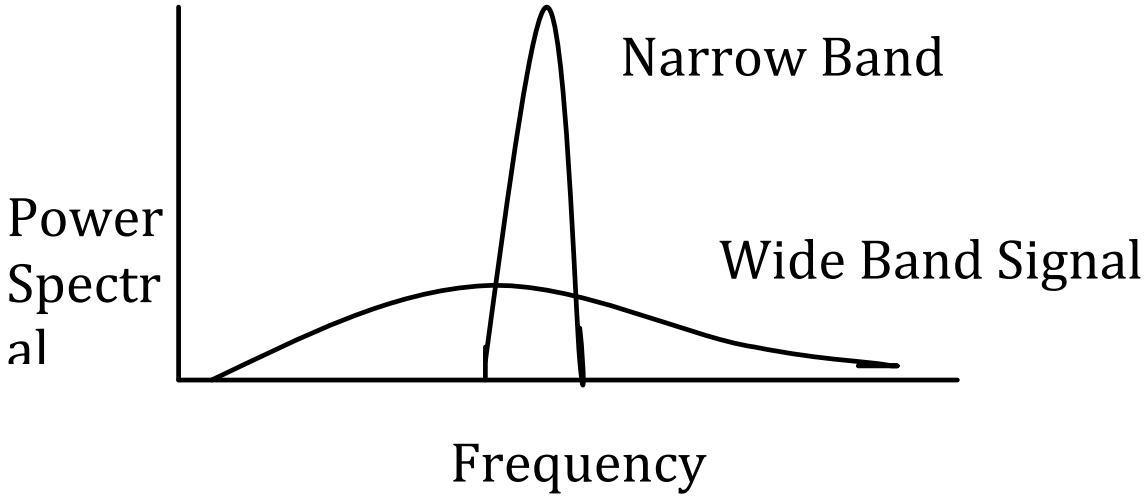

Spread Spectrum

A transmission technique in which a pseudo-noise code, independent of the information data, is employed as a modulation waveform, to spread the signal energy over a bandwidth much greater than the information signal bandwidth.

At the receiver the signal is de-spread using a synchronised replica of the pseudo-noise code.

Most commercial spread spectrum systems transmit an RF signal bandwidth in the neighbourhood of one to two orders of magnitude greater than the bandwidth of the information that is being sent.

Transmitted bandwidth can be as large as three orders of magnitude above the bandwidth of the information.

Principles of SS Communications

The SS system is the one in which the transmitted signal is spread over a wide frequency band, much wider than the minimum bandwidth required to transmit the information being sent.

A system is said to be a SS system, if it fulfils the following requirements;

- The signal occupies a bandwidth much larger than the minimum required bandwidth.
- Spreading is accomplished by means of a code which is independent of the data.
- Spreading code is pseudo-random, thus the spreading signal resembles noise.
- A synchronised reception with the code at the receiver is used for de-spreading the information before data recovery.

Principles of SS Communications Block Diagram

- Transmitter:

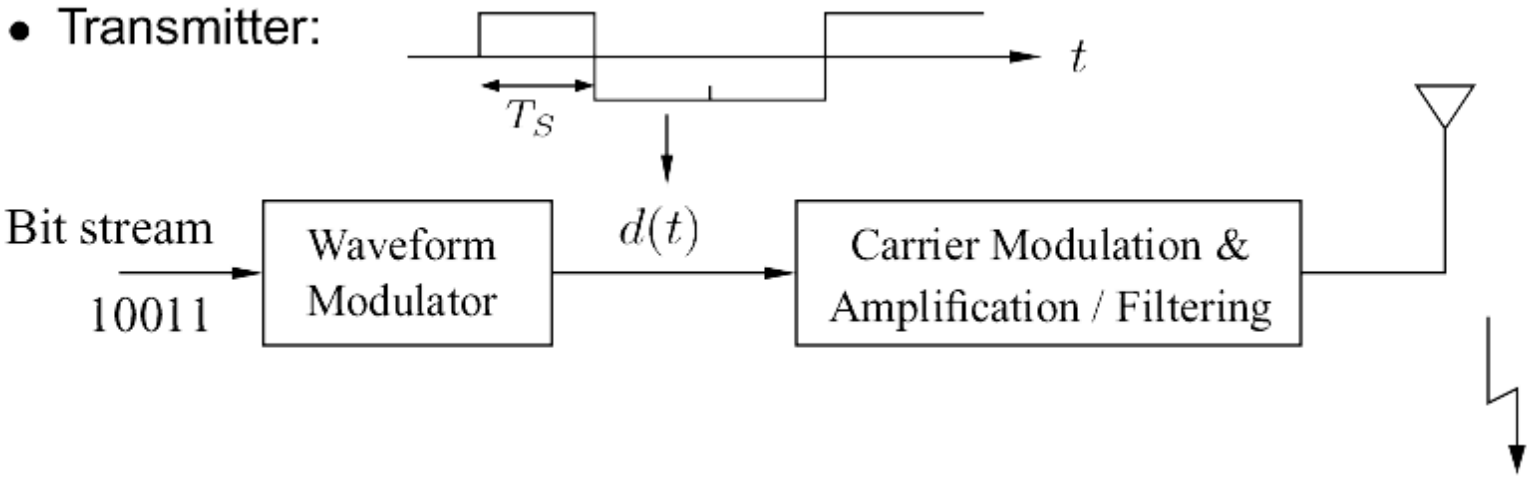

- Receiver:

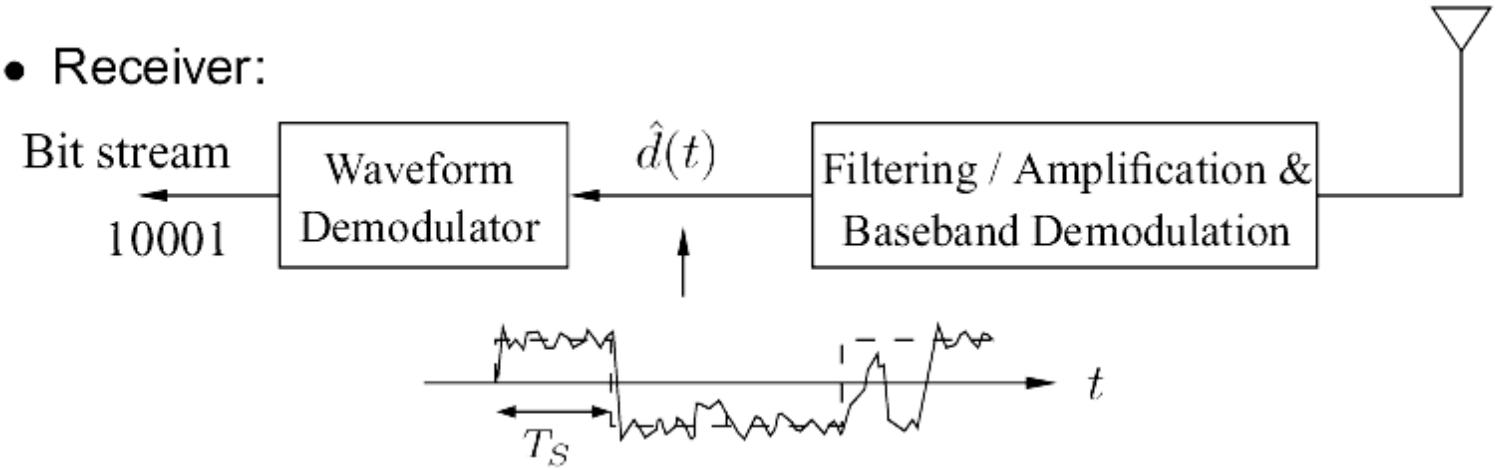

Principles of SS Communications Block Diagram

- SS Transmitter:

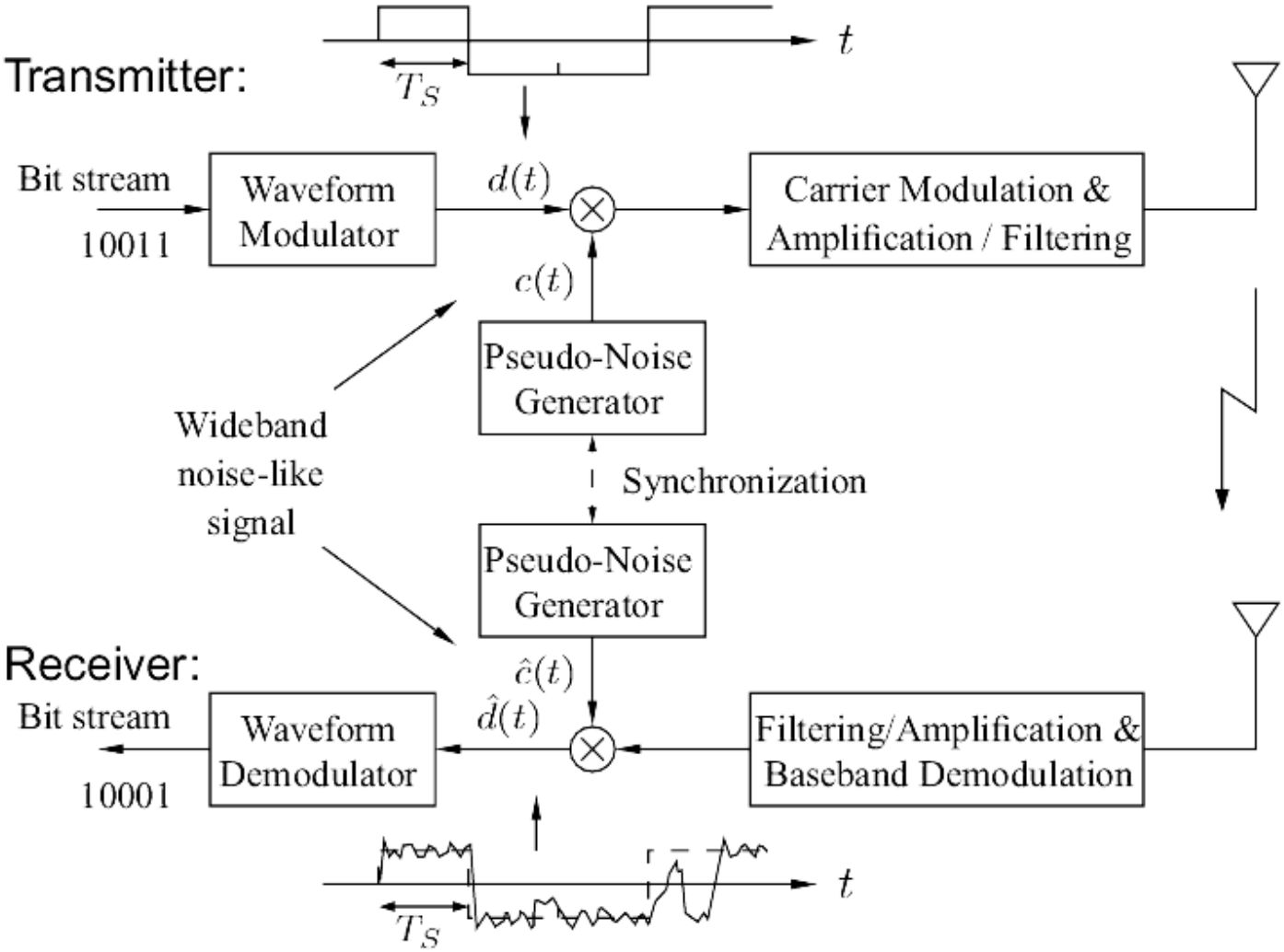

- SS Receiver:

Why Spread Spectrum

In general the motivations for the use of SS can be categorized as follow,

Anti-jamming/Anti-interference capability

- Spread Spectrum makes use of spreading code which is known only by the intended receiver.
- Signal de-spreading can then reject strong undesired signals.

Low Probability of Intercept (LPI)

- Signals spread uniformly in the frequency domain.
- Masks the transmitted signal in the background noise, making the detection very difficult.

Why Spread Spectrum (Cont'd)

Multiple Access

- Multiple SS links can share the same band with minimal co-channel interference.
- Spread spectrum methods can be used a multiple access technique, in order to multiplex (share) a communication resource among numerous users.
- The technique, termed code division multiple access (CDMA), since each simultaneous user employ a unique spread spectrum signalling code. One of the by products of this type of multiple access is the ability to provide communication privacy between users with different spreading signals. An un-authorized user cannot easily monitor the communications of the authorised users.

Why Spread Spectrum (Cont'd)

Low Probability of Detection (LPD)

- Since in SS System, the signal is spread over many more signalling components than conventional modulation schemes,
- $\Rightarrow$ the resulting signal power is spread uniformly in the spread domain.
- Thus the received signal is small, very difficult to detect by anyone except the desired receiver (or intended receiver) systems designed for this special task are known as low probability of detection (LPD) or low probability of intercept (LPI).

Basis of SS Technology

The basis of SS technology is expressed by Shannon theorem in the form of channel capacity as,

$$C = B \log_2 (1 + \gamma)$$

where

C is the capacity in bps, $\gamma = \frac{S}{N}$ is the signal to noise ratio and B is the bandwidth in Hz.

The above equation shows the relationship between the ability of a channel to transfer error-free information, compared with the signal to noise ratio existing in the channel and the bandwidth used to transmit the information.

Basis of SS Technology (Cont'd)

Letting C be the desired system information rate and by changing bases of Eq. in above slide, we find

$$\frac{C}{B} = 1.44 \log_e (1 + \gamma)$$

For very small SNR, $\log_e (1 + \gamma) \approx \gamma$, then we get $B = \frac{NC}{1.44S}$

This shows that for any given noise to signal ratio, we can have a low information error rate by increasing the bandwidth used to transfer the information.

Example

If we want a system to operate in a link in which the interfering noise is 100 times greater than the signal and if C = 3kbps, then, B = 2MHz.

Spread Spectrum Techniques

The following techniques are used in SS systems

- Direct Sequence (DS)
- Frequency Hopping (FH)
- Time Hopping (TH)
- Pulse frequency modulation (chirp)
- Hybrid forms [DS/FH, FH/TH and DS/FH/TH]

DS Spread Spectrum (DS-SS

- Each bit in the original signal is represented by multiple bits in the transmitted signal
  - Spreading code spreads signal across a wider frequency band
  - Spread is in direct proportion to the number of bits used
- One technique combines digital information steam with the spreading code bit stream using exclusive-OR

Spread Spectrum (Cont'd)

DS-SS modulation was originally developed for military communication systems between 1950 - 1980 to ensure robust and covered communications.

In DS-SS modulation, the information signal is spread over a much wider bandwidth that required based on the symbol rate.

A narrowband signal is made wideband !

How?

Why?

Spread Spectrum (Cont'd)

DS-SS modulation was originally developed for military communication systems between 1950 - 1980 to ensure robust and covered communications.

In DS-SS modulation, the information signal is spread over a much wider bandwidth that required based on the symbol rate.

A narrowband signal is made wideband !

How?
Signal spreading over a much wider bandwidth is achieved by multiplying the signal at the transmitter by a wideband code signal.

Why?

Spread Spectrum (Cont'd)

DS-SS modulation was originally developed for military communication systems between 1950 - 1980 to ensure robust and covered communications.

In DS-SS modulation, the information signal is spread over a much wider bandwidth that required based on the symbol rate.

A narrowband signal is made wideband !

How?
Signal spreading over a much wider bandwidth is achieved by multiplying the signal at the transmitter by a wideband code signal.

Why?
To create robustness against: multi-path fading and dispersion, interference, detection, eavesdropping.
Because of the low PSD, its presence is difficult to detect.

DS-SS Transmitter

In DS-SS spreading of the signal over a much wider bandwidth is achieved by multiplying the signal at the transmitter by a code sequence $c(t) \in \{-1, +1\}$ consisting of code chips.

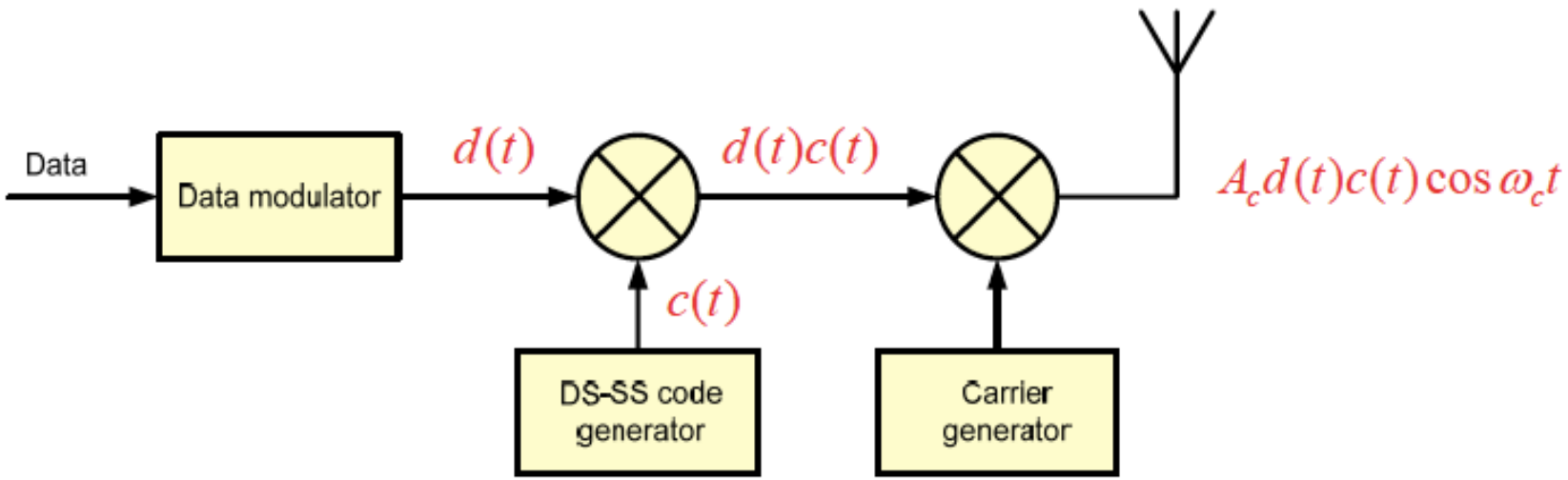

The transmitted signal is:

$$x_c(t) = A_c d(t)c(t)\cos\omega_c t$$

DS-SS Transmitter (Cont'd)

Signals in a DS-SS transmitter for a BPSK data modulation signal.

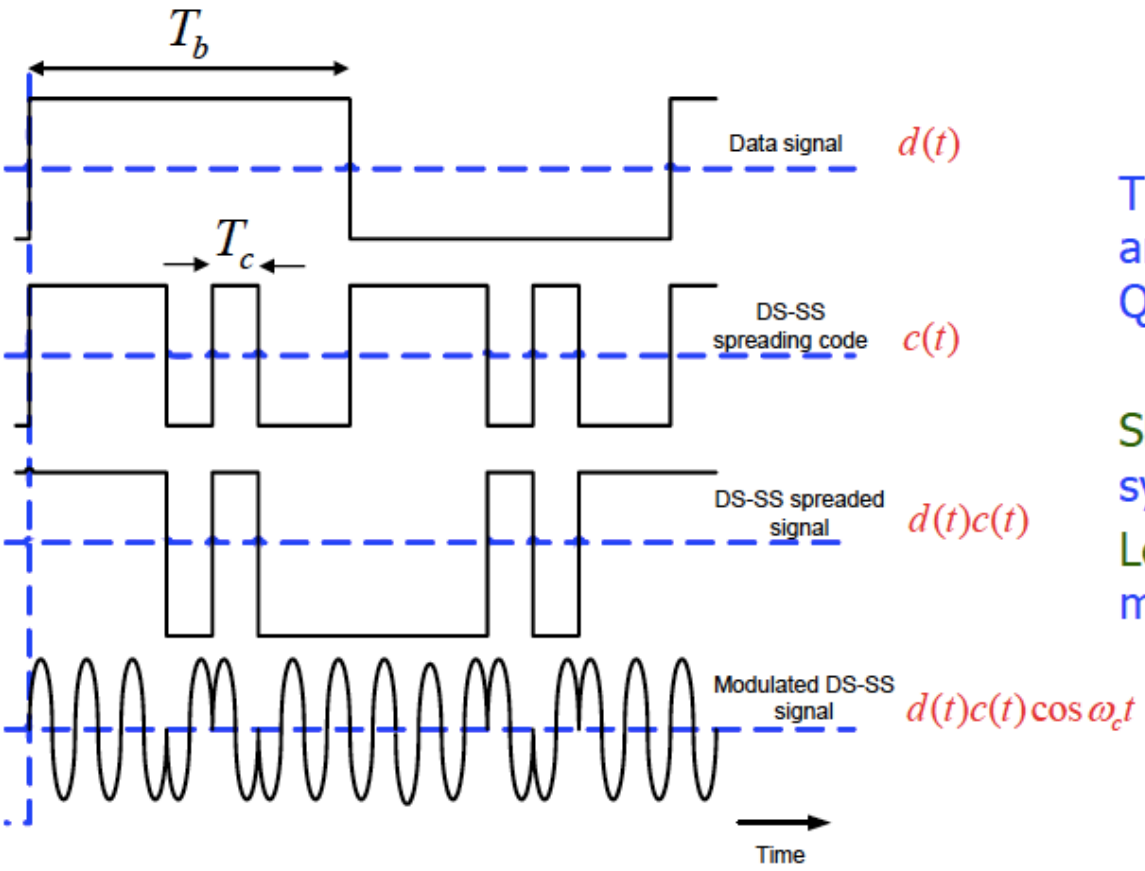

The data modulation can be arbitrary, e.g. BPSK, DPSK, QPSK, MSK, QAM, etc.

Short code: repeated every symbol time

Long code: extends over many symbol times

DS-SS Transmitter (Cont'd)

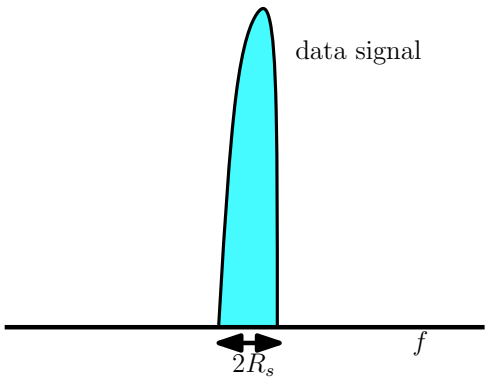

DS-SS Transmitter (Cont'd)

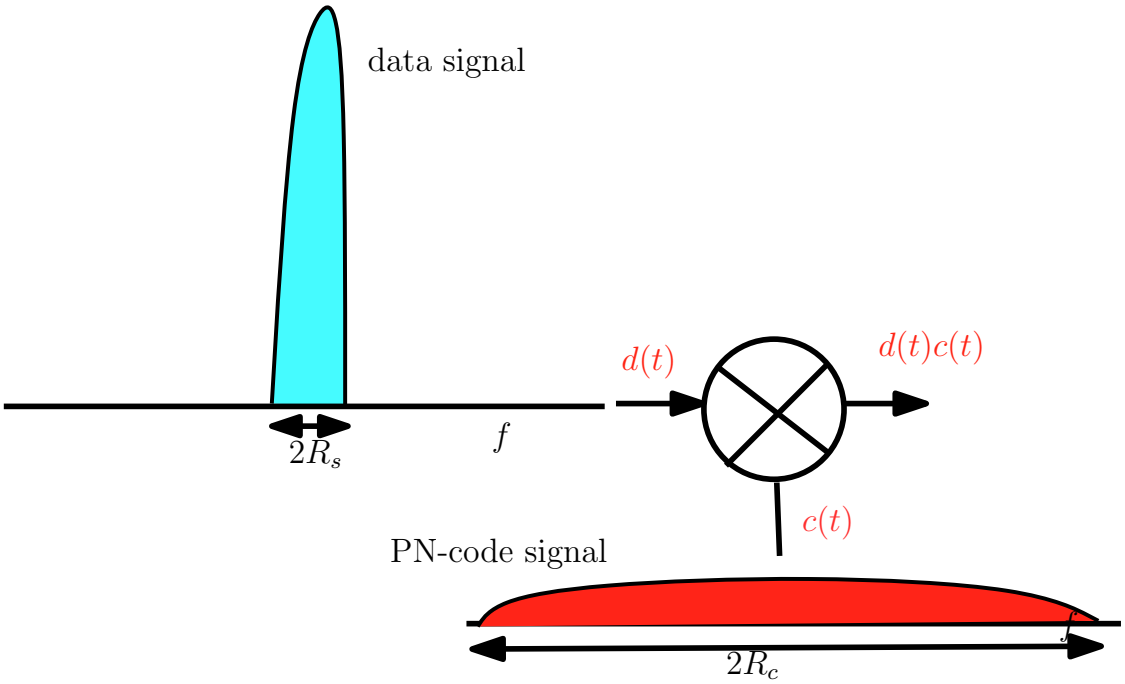

DS-SS Transmitter (Cont'd)

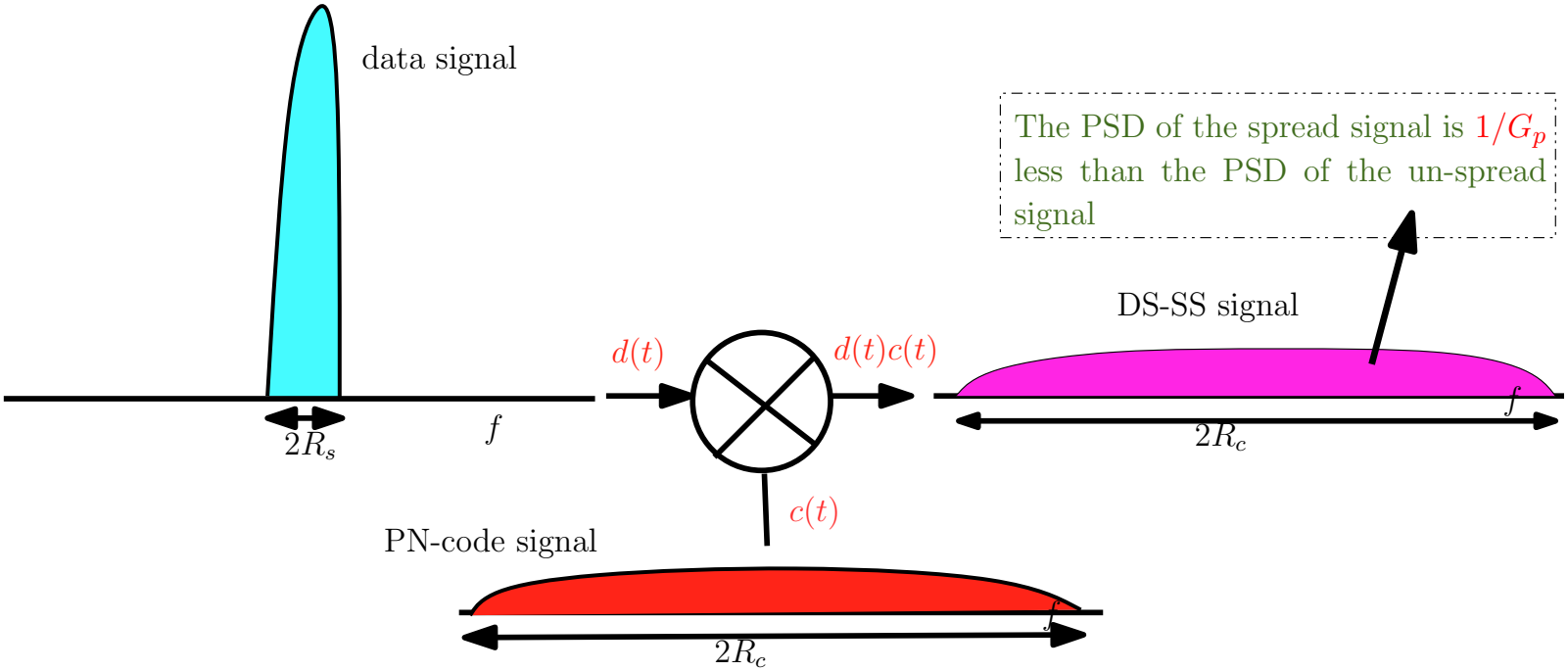

The chip rate $R_c = \frac{1}{T_c} \gg$ symbol rate $R_s = \frac{1}{T_s}$

The ratio $G_p = \frac{BW_{DS-SS}}{BW_{data}} = \frac{R_c}{R_s} = \frac{T_s}{T_c}$ is called the processing gain or spreading factor.

DS-SS Reception

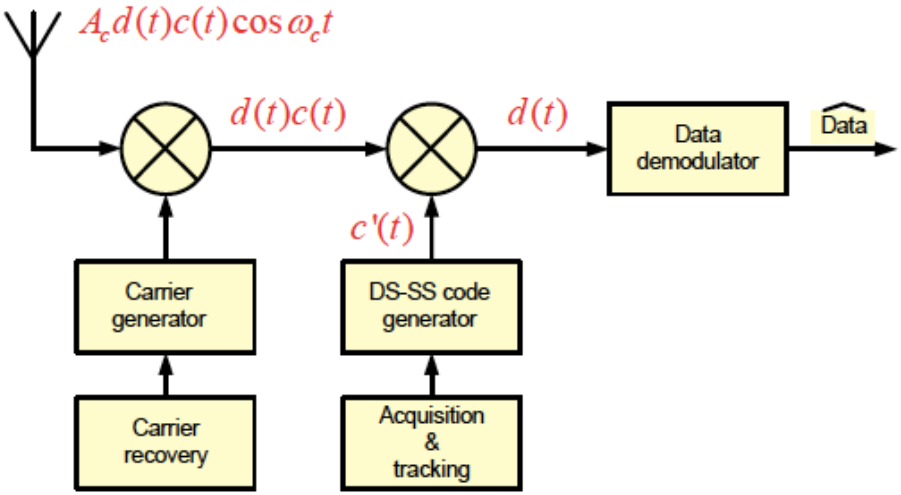

- At the DS-SS receiver, the reverse operation is performed
- We can recover the signal only if: $c(t)c'(t)d(t) = d(t) \Rightarrow$
- The code is known
- Perfect synchronization

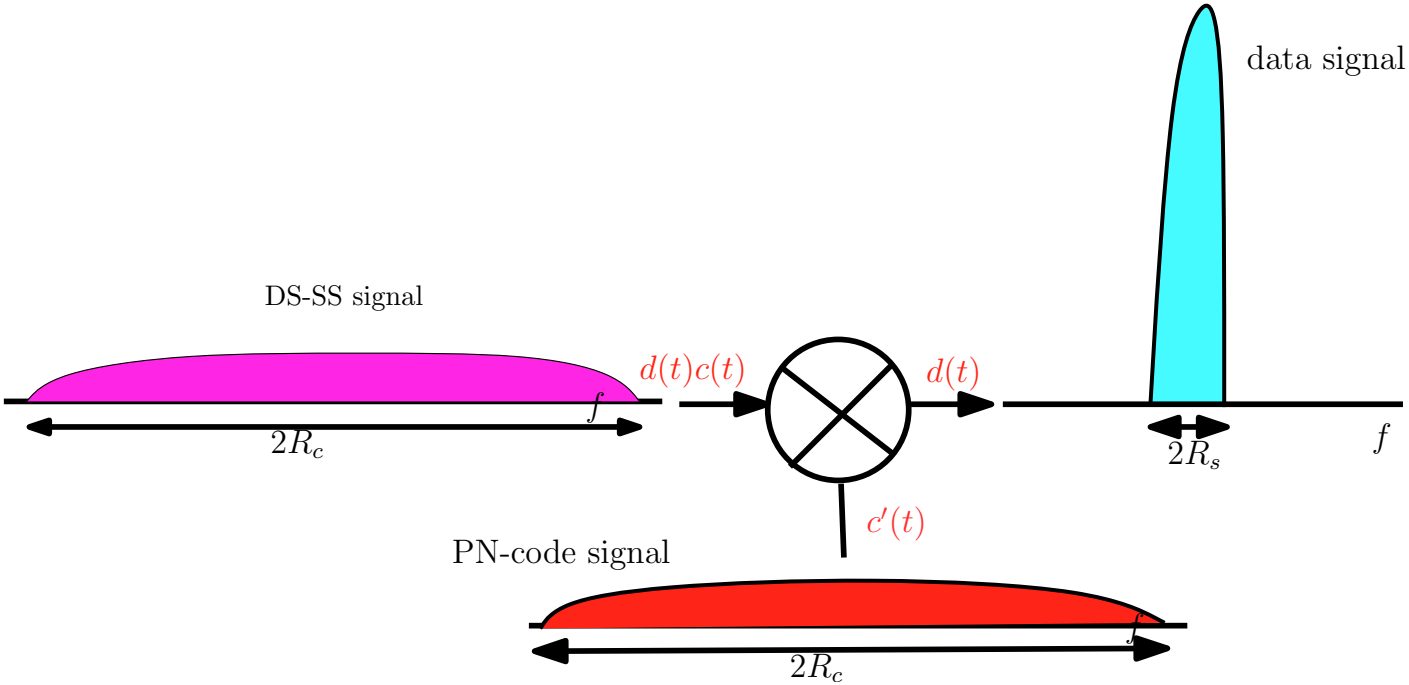

DS-SS Reception (Cont'd)

DS-SS is very robust against interference. When de-spreading the desired signal, the interference is spread.

Only a fraction $1/G_p$ of the spread interference overlaps with the de-spread data signal spectrum.

Effective Interference power: $I_{eff} = P_I \frac{BW_{data}}{BW_{spread-interference}} = P_I \frac{2R_s}{2R_c} = \frac{P_I}{G_p}$

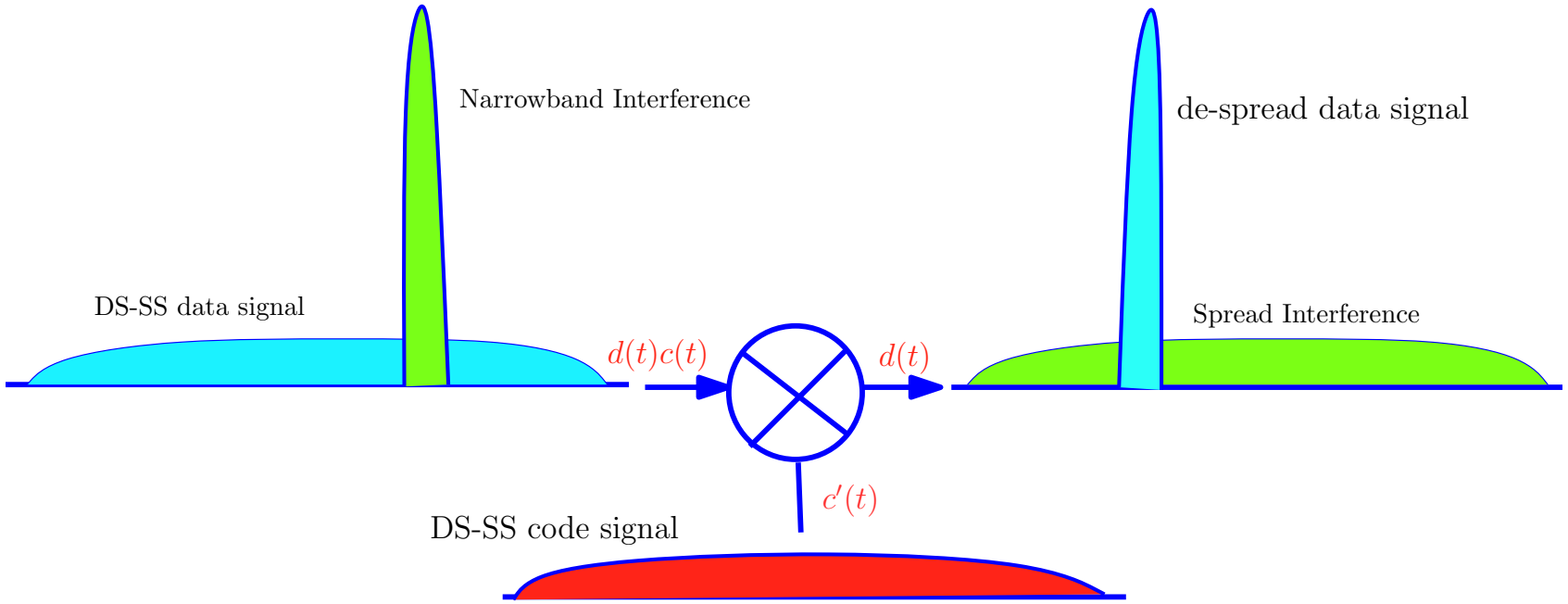

DS-SS Reception (Cont'd)

DS-SS is also robust against other DS-SS interference signals. When the SS-code or code phase is different, the signal remains spread.

Also in this situation, only a fraction $1/G_p$ of the interference spectrum overlaps with the de-spread data signal spectrum.

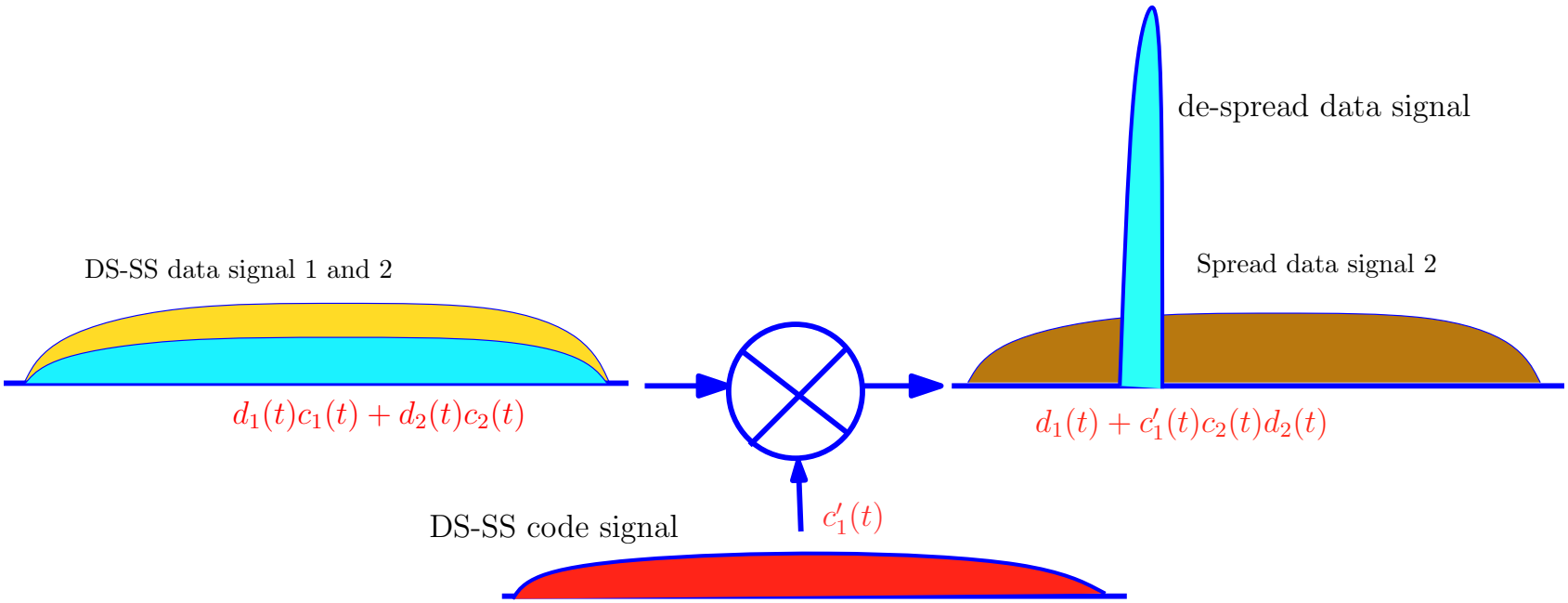

Pseudo-noise code generators

A DS-SS code is a ”pseudo random” sequence of $\{-1, 1\}$. There are several ways to generate DS-SS codes depending on the required properties. One way is to use ”Maximum length sequences” which are also called Pseudo-Noise (PN) codes because of their noise like spectral properties.

Maximum Length (ML) sequences can be digitally generated in a simple way using a shift register with a feedback.

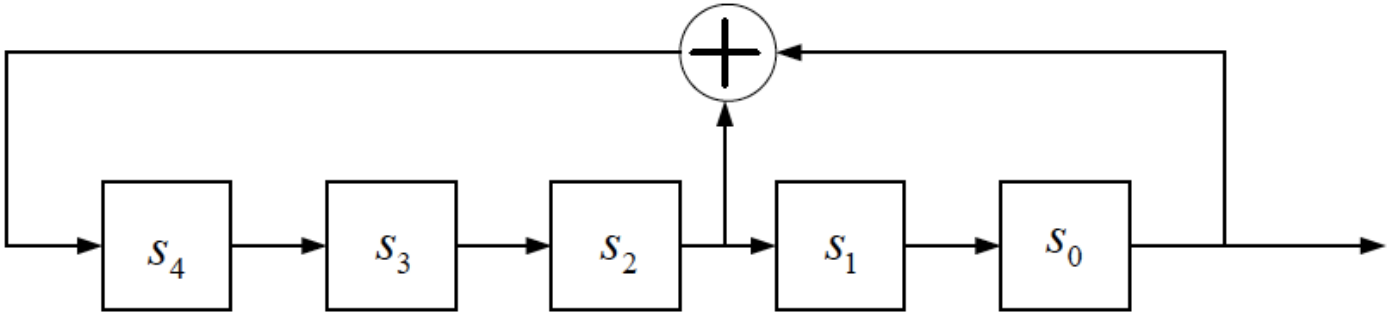

A ML-code generator using a five stage shift register with code length 31.